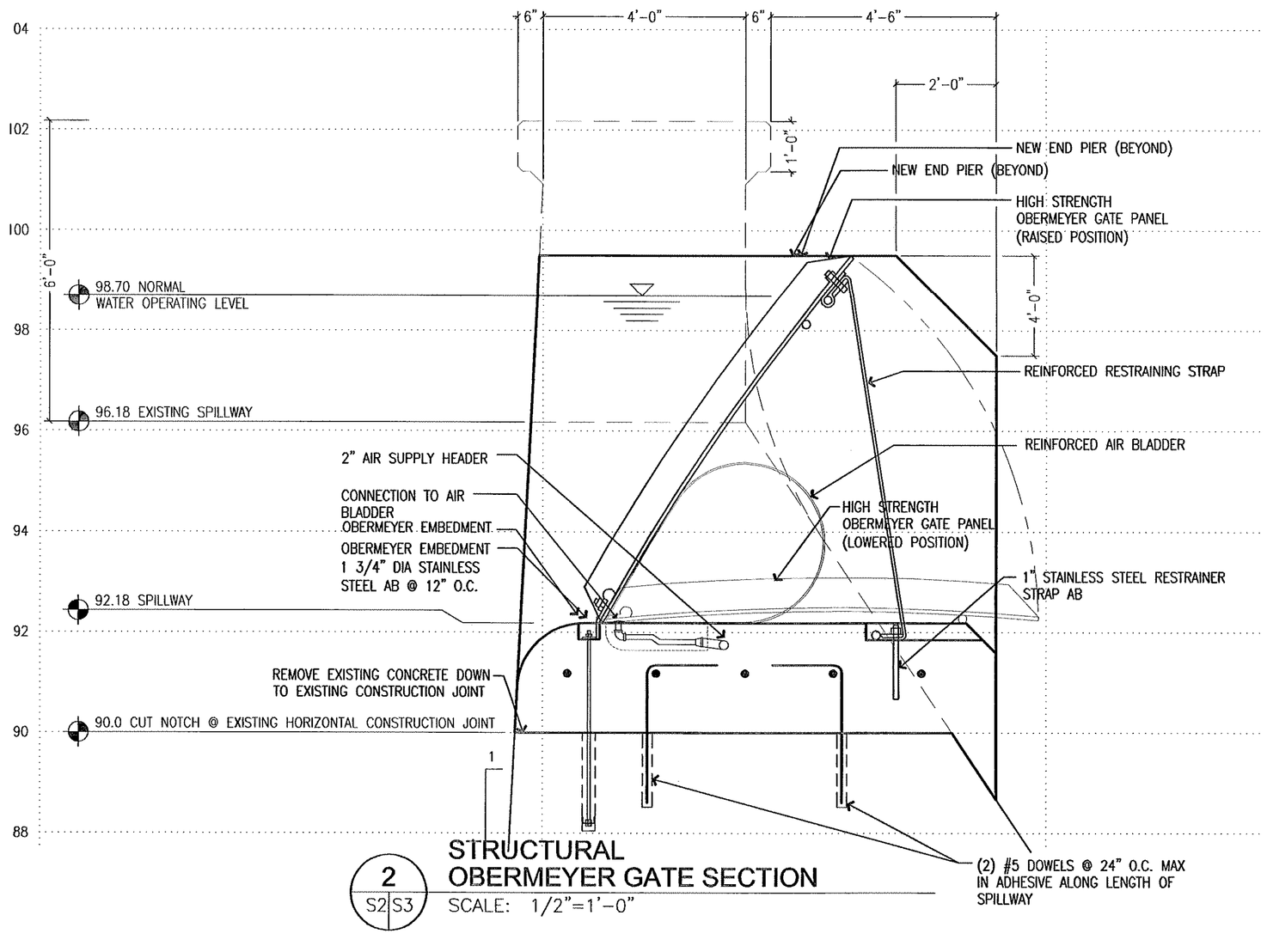

2 S2|S3 STRUCTURAL OBERMEYER GATE SECTION
SCALE: 1/2"=1'-0"

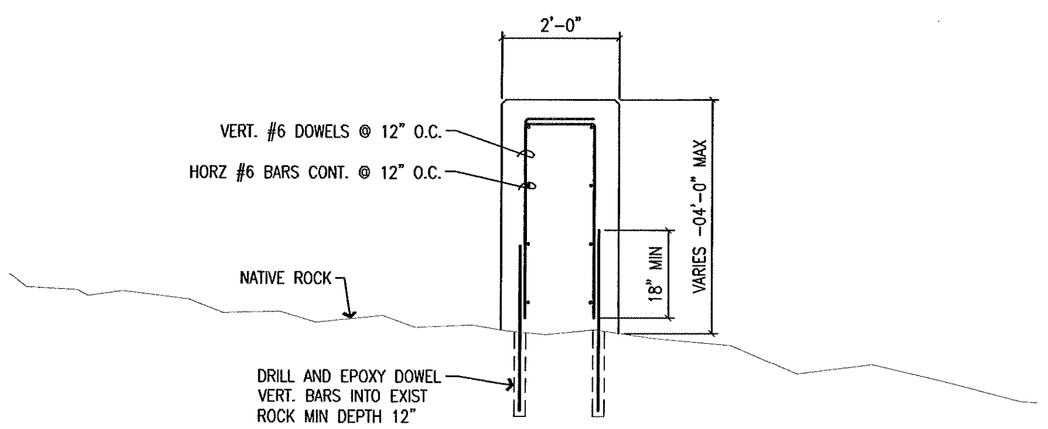

3 S2|S3 DEFLETION WALL
SCALE: 1/2"=1'-0"

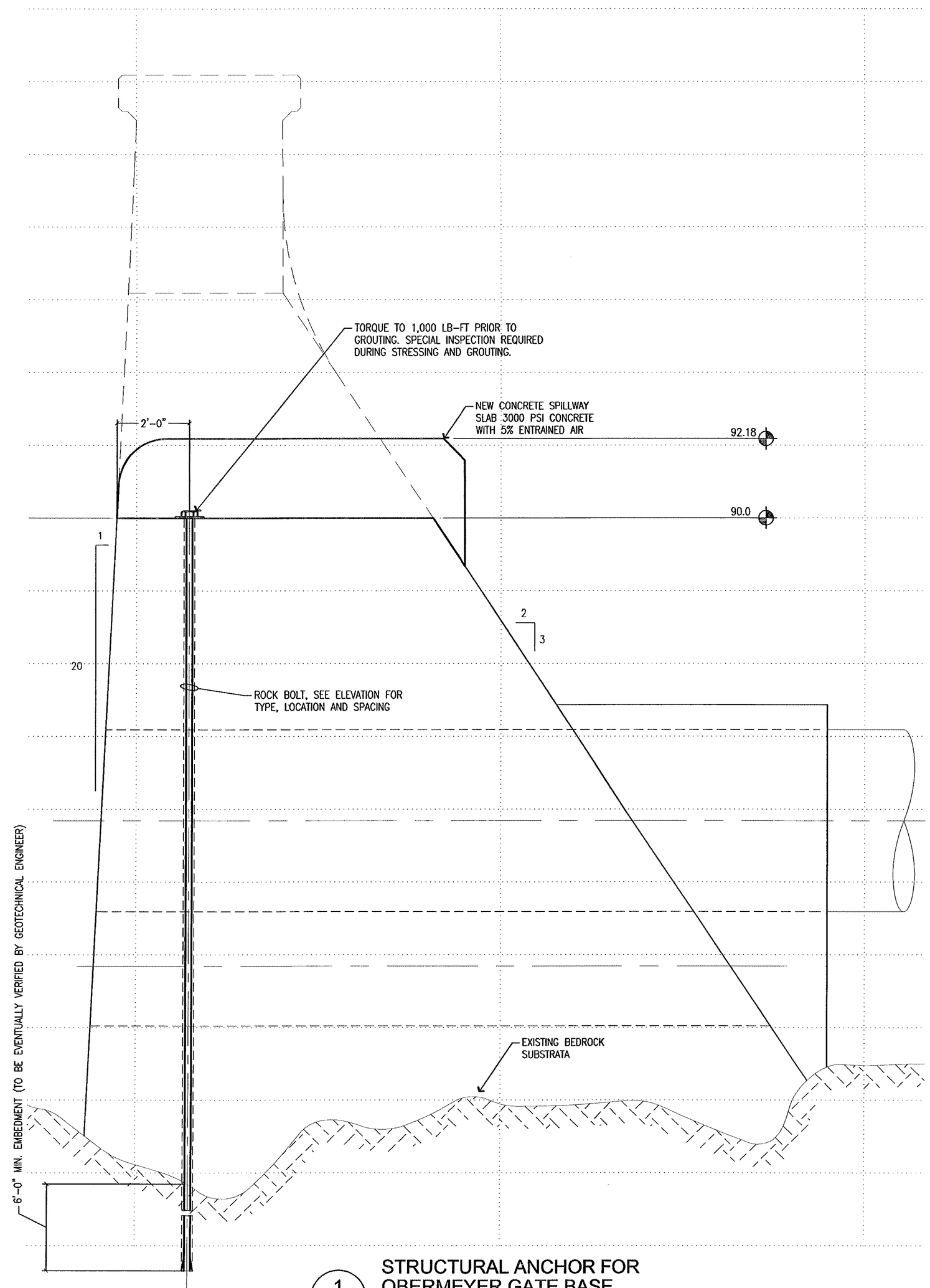

1 S2|S3 STRUCTURAL ANCHOR FOR OBERMEYER GATE BASE
SCALE: 1/2"=1'-0"

SYM.	DESCRIPTION	DATE	APPROVED

REVISIONS

WINZLER & KELLY
15575 SW SEQUOIA PKWY, SUITE 140
PORTLAND, OR 97224
PH: 503-226-3921 FAX: 503-226-3926

DAVIDBUGNI & ASSOCIATES
Consulting Structural Engineers
30065 S.E. Kowall Road
Estacada, OR 97023
(503) 630-3006
Fax: (503) 630-3907
SUBCONSULTANT

DESIGNED DAB	CHECKED DAB
DRAWN KPT	DATE 09/22/09
SCALE NONE	

BAR IS ONE INCH ON ORIGINAL DRAWING IF NOT ONE INCH ON THIS SHEET, ADJUST SCALES ACCORDINGLY

SEAL

LAKE OSWEGO CORPARATION
LAKE OSWEGO DAM

STRUCTURAL
SECTIONS AND DETAILS

JOB NUMBER 11785-09002

SHEET 10 OF

S3

Reuse of Documents; This document and the ideas and designs incorporated herein, as an instrument of professional service, is the property of Winzler & Kelly and shall not be reused in whole or in part for any other project without Winzler & Kelly's written authorization. © 2009 Winzler & Kelly

O:\11785 - LOC (LAKE OSWEGO CORPORATION)\11785-09002 LOC DAM SPILLWAY DESIGN\CAD\11785-09002_S3.DWG Keith Tolle 10/19/2009 10:24 AM